High Temperature Burners

EIL burner

EIL-100,200,300,400,600,800

The EIL burner demonstrates its power as a burner for nonferrous metal melting furnaces that require long luminous soft frames.

Feature

1. **Stable combustion can be obtained.**
   The turndown ratio becomes large, and stable combustion can be obtained over the entire combustion amount.There is no worry of backfire in low combustion area.
2. **Flame is high brightness and long soft frame.**
   Reduction of oxides and improvement of combustion efficiency can be achieved in frames with high luminance.
3. **Simple combustion system**
   Direct ignition method is possible, piping system can be simple.
4. **Easy to install**
   It is unnecessary to use a burner exclusive tile and you can use it only by drilling holes of specified size in the refractory material of the furnace body.
5. **Easy maintenance**
   The burner head can be easily detached by the clamp mechanism, the inspection and cleaning around the burners of the furnace body easy.
6. There are two types, S type (no burner tile) and T type (integrated with burner tile).

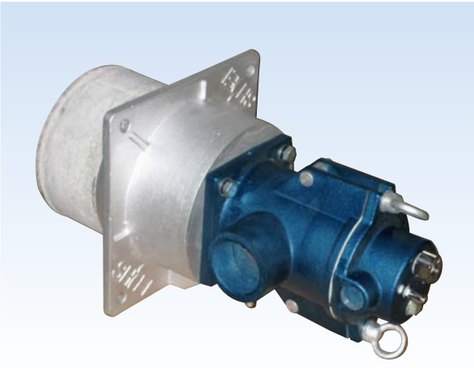

● flame

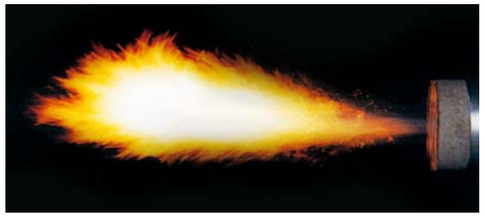

Construction

S type (Insert into furnace body side refractory wall)

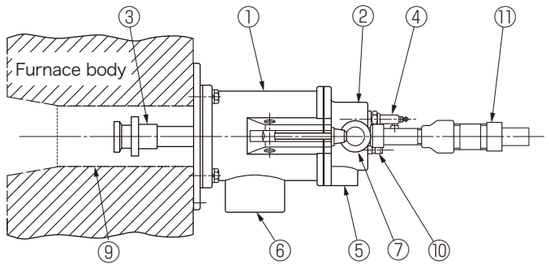

T type (Tile integrated type)

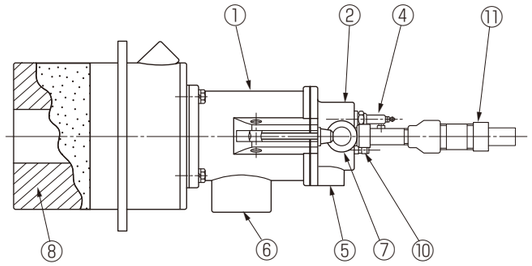

① burner casing
② burner head
③ burner nozzle
④ spark rod
⑤ gas connecting port
⑥ air connecting port
⑦ clamp
⑧ burner tile
⑨ Furnace side opening (image)
⑩ sight hole
⑪ ultraviolet phototube
(It is not included in the body)

Main Usage

- Nonferrous metal melting furnace, holding furnace

● model table

EIL — combustion capacity | gas type | burner top

signal	Select Specifications
100	116kW
200	233kW
300	349kW
400	465kW
600	698kW
800	930kW

signal	Select Specifications
N	natural gas(45MJ/㎥N)
P	LP gas(100MJ/㎥N)
O	others

signal	Select Specifications
M	without burner tile
T	with burner tile
O	others

Note) For the ignition method, please select either direct or pilot based on the specification list.

Specifications

Model			EIL-100	EIL-200	EIL-300	EIL-400	EIL-600	EIL-800
maximum combustion quantity(kW)			116	232	348	464	696	928
burner gas pressure(kPa)			1.08	1.4	1.04	0.99	1.06	1.45
burner air pressure(kPa)			0.96	1.78	0.96	1.62	1.06	2.1
burner tile	S(without tile top)		○	○	○	○	×	×
	T(with tile top)		○	○	○	○	○	○
ignition method	S	direct	○	○	○	○	×	×
		pilot	×	×	×	×	×	×
	T	direct	○	○	○	○	×	×
		pilot	○	○	○	○	○	○

※The combustion amount · burner gas pressure · air pressure indicates the case of furnace pressure 0 kPa · LPG gas · air temperature 20 ° C and air ratio 1.1.

Overall size

S type

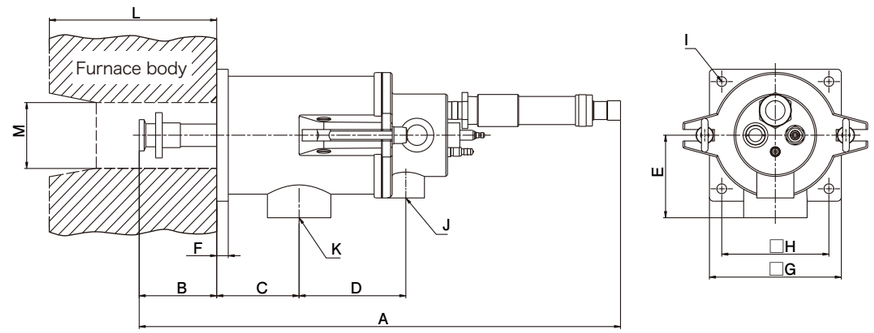

Model	Overall size(mm)					mounting size(mm)				connecting size(Rc)		Furnace internal opening size(mm)	
	A	B	C	D	E	F	G	H	I	J(Gas)	K(Air)	L	M(φ)
EIL-100S	507	80	70	115	100	14	135	104	4-φ12	3/4	2	200	62
EIL-200S	579	80	100	129	120	14	160	130	4-φ12	3/4	2 1/2	200	80
EIL-300S、400S	649	80	140	159	160	14	200	160	4-φ12	1	4	100	200

Overall size

≫ T type

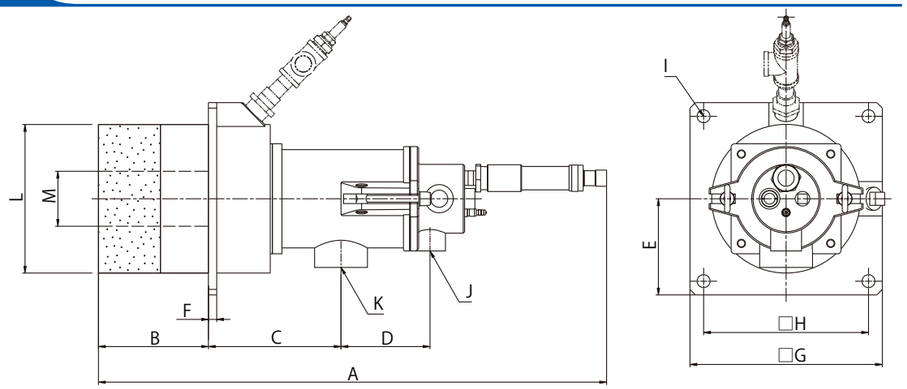

Model	Overall size (mm)					mounting size (mm)				connecting size		tile top size (mm)	
	A	B	C	D	E	F	G	H	I	J (Gas)	K (Air)	L (φ)	M (φ)
EIL-100T	652	135	160	115	100	12	250	210	4-φ18	3/4	Rc 2	190.7	68
EIL-200T	752	160	193	129	120	12	280	240	4-φ18	3/4	Rc 2 1/2	216.3	80
EIL-300 T、400 T	892	200	263	159	160	16	330	290	4-φ18	1	※ 4	267.4	105

※ JIS 5 k Flange

≫ T type

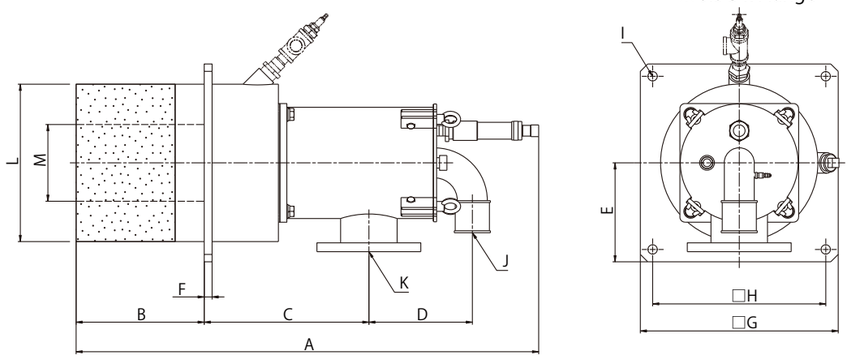

Model	Overall size (mm)					mounting size (mm)				connecting size		tile top size (mm)	
	A	B	C	D	E	F	G	H	I	J (Gas)	K (Air)	L (φ)	M (φ)
EIL-600T、800T	950	250	333	210	180	16	400	350	4-φ22	Rp 2	※ 4	318	155

※ JIS 5 k Flange

Example of flow sheet

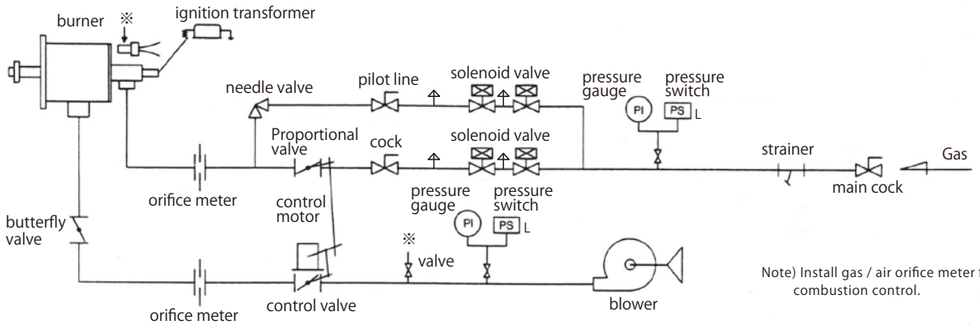

Note) Install gas / air orifice meter for combustion control.

Burner characteristics

Frame shape

■ Relationship between the length and hole diameter and the combustion load of the visible flame.

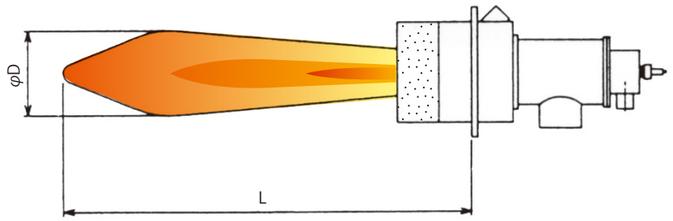

Combustion condition
- burner model :EIL-T
- Combustion :Atmosphere
- fuel :LPG
- air ratio :1.1

Model	Combustion capacity kW(×10⁴kcal/h)	Frame diameter approximately φD mm	Visible flame length approximately L mm
EIL-100T	116(10)	260	1200
EIL-200T	232(20)	350	1300
EIL-300T	348(30)	420	1500
EIL-400T	464(40)	480	1700
EIL-600T	696(60)	550	1700
EIL-800T	928(80)	620	2500

Option

The following options are available as option specifications.
Please inform us when ordering.

≫ T type

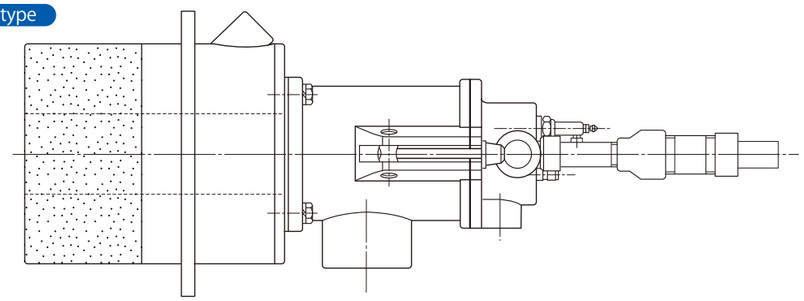

Note) Please use the pilot burner when ignition / extinguishing frequency is high, when the ignition capacity is large, etc.

Burner installation example

S type

■standard installation example

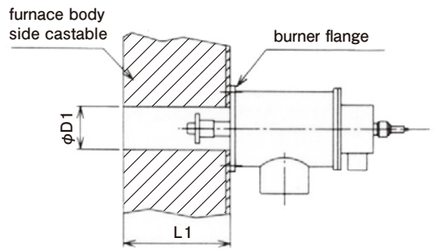

■When the furnace wall is thick

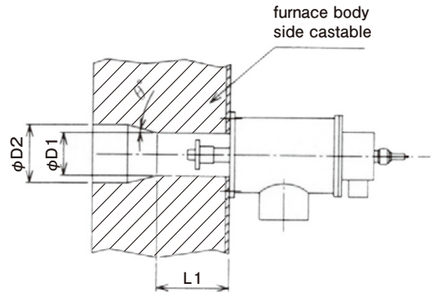

Model	L1 (mm)	φD1 (mm)	φD2 (mm)	θ°
EIL-100S	200 $^{+100}_{-0}$	68±2	150以下	5～15
EIL-200S	200 $^{+100}_{-0}$	80±2	180以下	5～15
EIL-300S	200 $^{+100}_{-0}$	80±2	180以下	5～15
EIL-400S	250 $^{+100}_{-0}$	105±2	230以下	5～15

Note) · Please avoid squeezing beyond the straight part of the combustion tube.
· Please use castable material which can withstand burner combustion sufficiently.
(Heat resistant temperature 1700℃. Bulk specific gravity 2.1 or higher)
· Always strictly observe the specified dimensions for the dimensions around the combustion tube and burner.

T type

■standard installation example

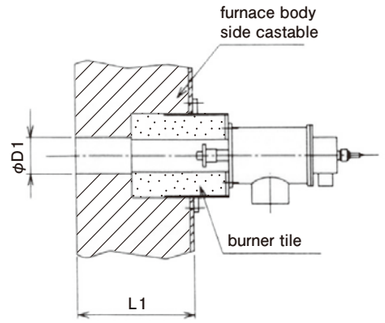

■炉壁が厚い場合

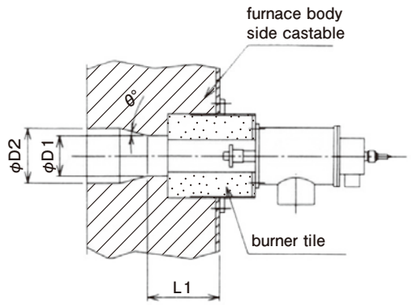

Model	L1 (mm)	φD1 (mm)	φD2 (mm)	θ°
EIL-100T	200 $^{+100}_{-0}$	78±3	150以下	5～15
EIL-200T	200 $^{+100}_{-0}$	90±3	180以下	5～15
EIL-300T	250 $^{+100}_{-0}$	115±3	230以下	5～15
EIL-400T	250 $^{+100}_{-0}$	115±3	230以下	5～15
EIL-600T、800T	300 $^{+100}_{-0}$	166±3	340以下	5～15

Note) · Please be careful that there is no eccentric between the burner tile exit and φD1.